4102, 4502

DCI II Manual Unit Plumbing Diagram

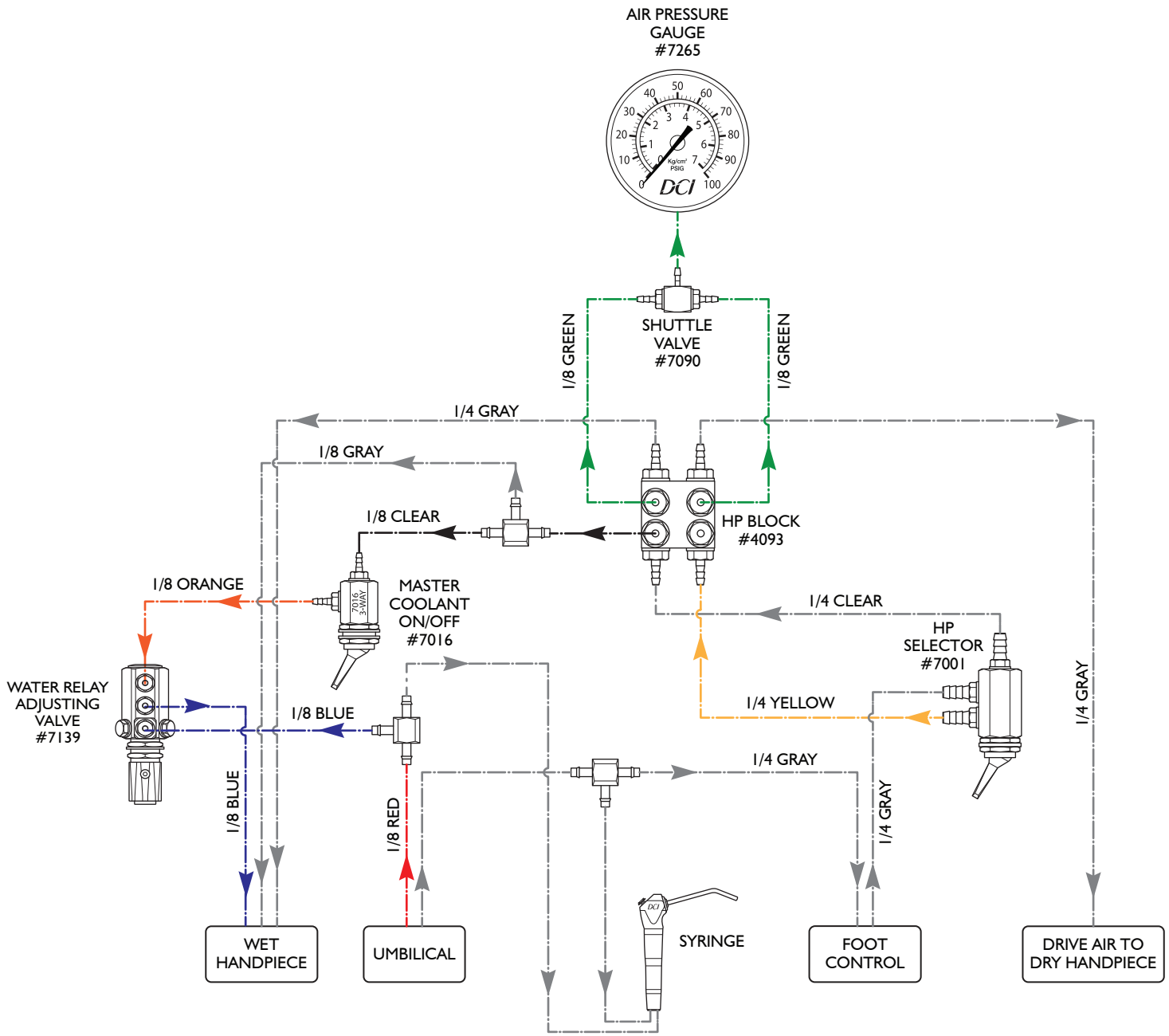

www.dcionline.com
800-624-2793

305 N. Springbrook Road
Newberg, OR 97132, USA