4470
Reliance Cabinet Mount Automatic Control Unit for 3 HP
Plumbing Diagram

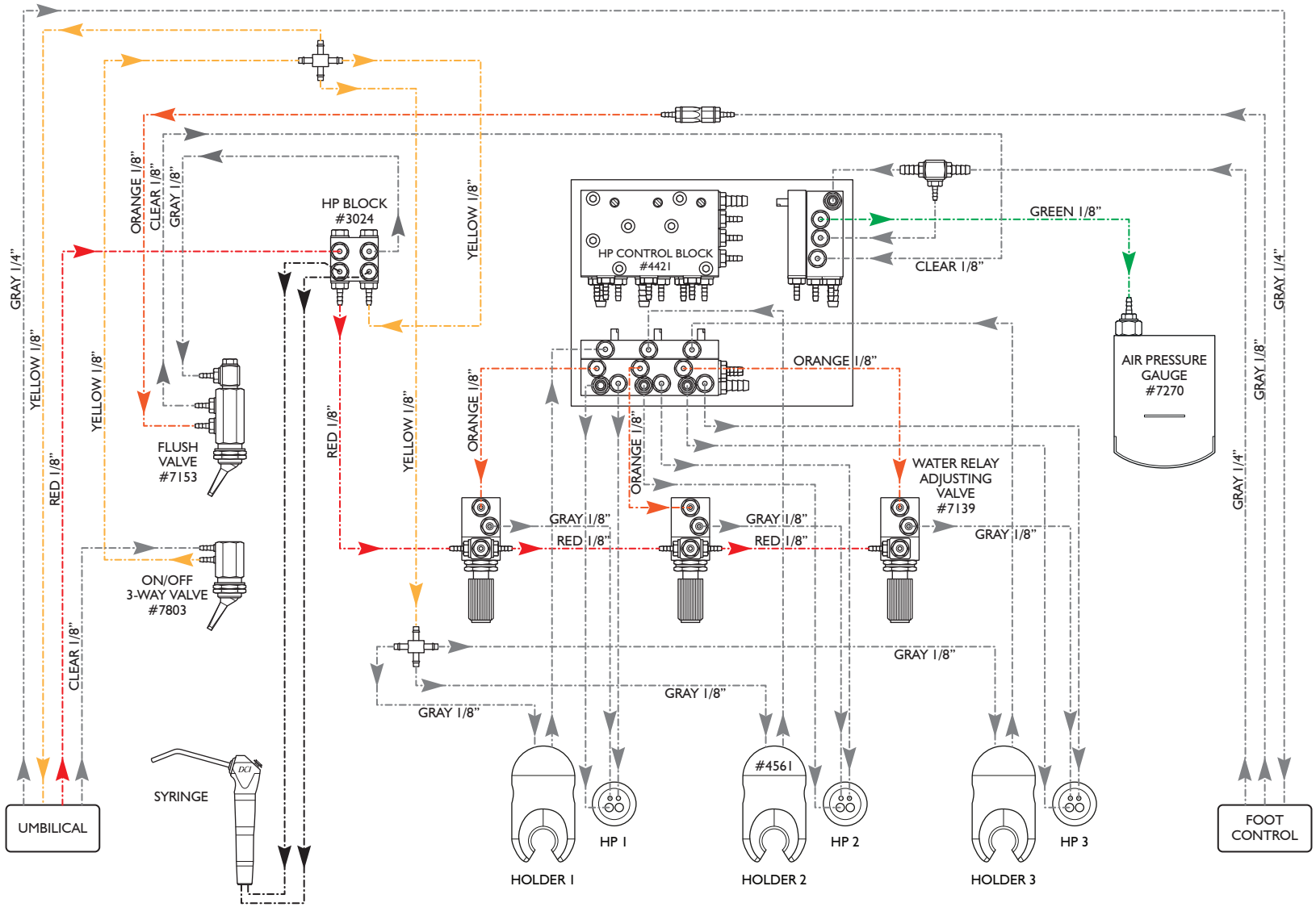

www.dcionline.com
800-624-2793

305 N. Springbrook Road
Newberg, OR 97132, USA